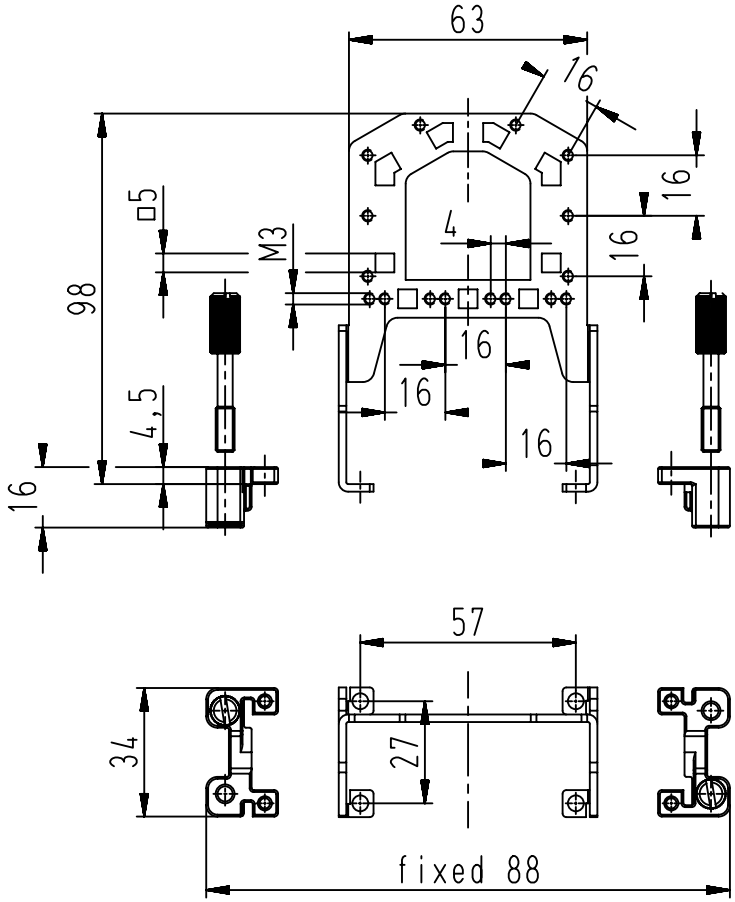

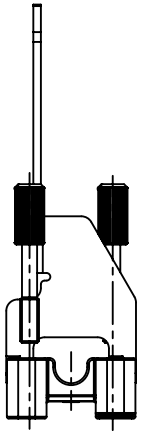

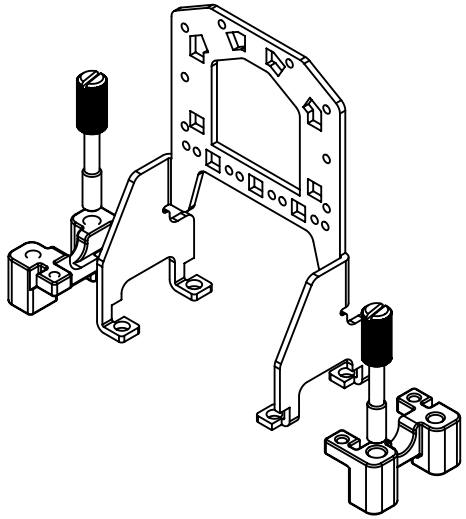

fits for Han-Modular hinged frame for 3 modules and
for inserts size 10 B
pinhole image for cable clamp 09 00 000 5341,
09 00 000 5342 and cable ties with max. 5mm width

range of delivery:
grip frame, screw adapters
and screw pins

All Dimensions in mm Original Size DIN A4	Scale 1:2	Free size tol.		Ref. Sub. TB 09000105605 v. 23.04.12	
All rights reserved Department EL PD - DE	Created by SCHULZI	Inspected by RUETERA	Standardisation SCHMIDTM	Date 2014-04-11	State Final Release
HARTING Electric GmbH & Co. KG D-32339 Espelkamp	Title grip frame with screwadapter				Doc-Key / ECM-Nr. 100229533/UGD/002/B 5000000038958
	Type TB	Number 09 00 010 5605		Rev. B	Page 1/1

A4