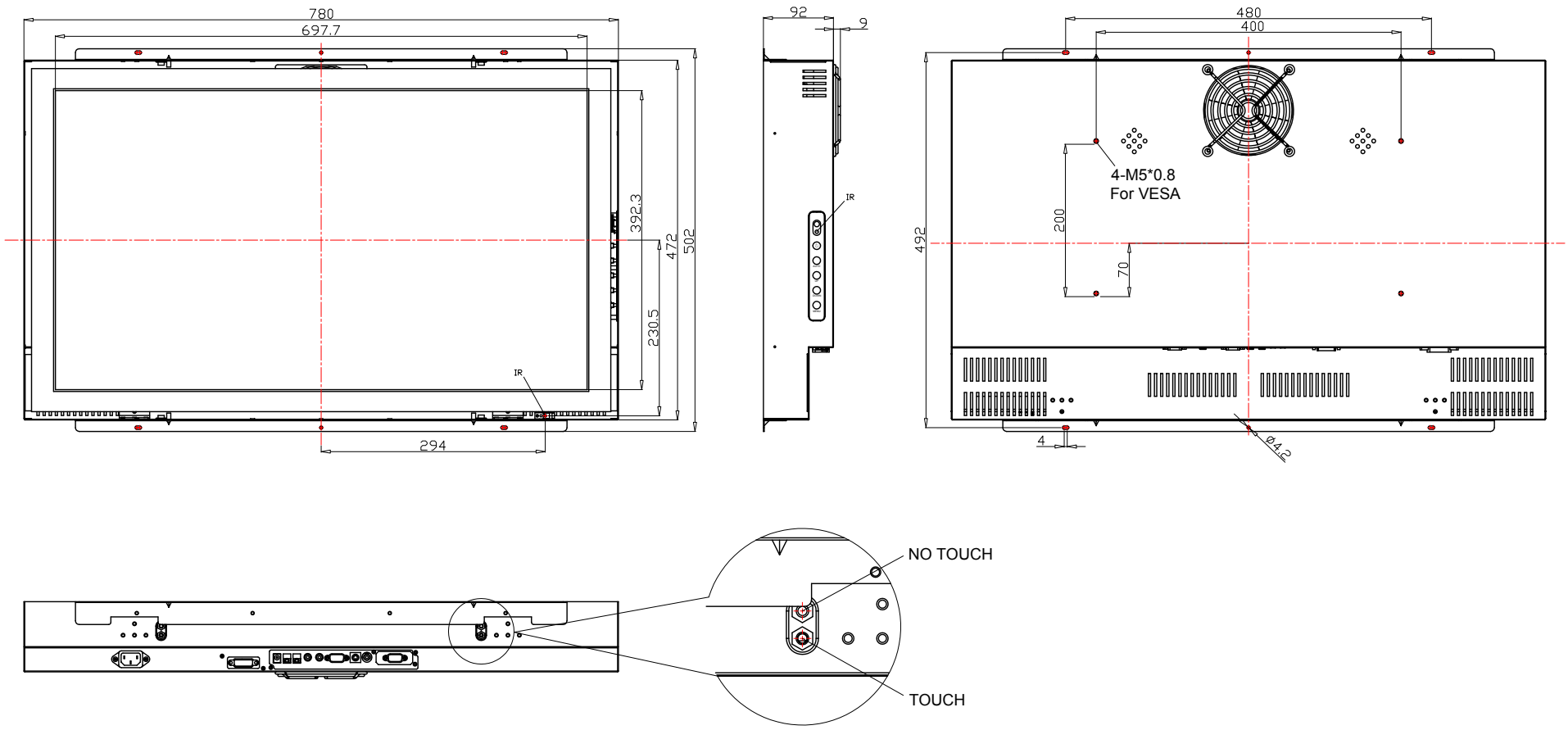

AD/BOARD		MODEL	OF3205v3			泓瑜科技有限公司 WINSONIC TECH. CO., LTD.			
INVERTER									
KEY PAD		PART NO.				PART NAME	Assembly	SCALE	1:1
PANEL:	VERSION								
	V1	MATERIAL	METAL	DATE	2012-Feb-10	APPROVED		DRAWN JACK	UNIT MM